960W Single Output Industrial DIN RAIL with PFC Function

SDR-960 series



Features :

- AC input 180~264VAC only
- 130% peak load capability
- 110mm slim design
- Built-in active PFC function compliance to BS EN/EN61000-3-2
- High efficiency 94% and low power dissipation
- Protections: Short circuit / Overload / Over voltage / Over temperature
- Cooling by free air convection
- Built-in constant current limiting circuit
- Can be installed on DIN rail TS-35/7.5 or 15
- UL508(industrial control equipment)approved
- BS EN/EN61000-6-2(BS EN/EN50082-2) industrial immunity level
- Current sharing up to 3840W(3+1)
- Built-in DC OK relay contact
- 100% full load burn-in test
- 3 years warranty

User's Manual
Scan or Click

GTIN CODE

MW Search: https://www.meanwell.com/serviceGTIN.aspx

Parallel R33100 RoHS UL508 EN BS/EN62368-1 TPTC004 IEC62368-1

SPECIFICATION

MODEL		SDR-960-24	SDR-960-48
OUTPUT	DC VOLTAGE	24V	48V
	RATED CURRENT	40A	20A
	CURRENT RANGE	0 ~ 40A	0 ~ 20A
	RATED POWER	960W	960W
	PEAK CURRENT	52A	26A
	PEAK POWER Note.6	1248W (3sec.)	
	RIPPLE & NOISE (max.) Note.2	180mVp-p	250mVp-p
	VOLTAGE ADJ. RANGE	24 ~ 28V	48 ~ 55V
	VOLTAGE TOLERANCE Note.3	±1.0%	±1.0%
	LINE REGULATION	±0.5%	±0.5%
	LOAD REGULATION	±1.0%	±1.0%
	SETUP, RISE TIME	1000ms, 100ms/230VAC at full load	
	HOLD UP TIME (Typ.)	14ms / 230VAC at full load	
INPUT	VOLTAGE RANGE Note.7	180 ~ 264VAC 254 ~ 370VDC	
	FREQUENCY RANGE	47 ~ 63Hz	
	POWER FACTOR (Typ.)	PF≧0.95/230VAC at full load	
	EFFICIENCY (Typ.)	94%	94%
	AC CURRENT (Typ.)	6A/230VAC	
	INRUSH CURRENT (Typ.)	COLD START 50A / 230VAC	
	LEAKAGE CURRENT	<3.5mA / 240VAC	
PROTECTION	OVERLOAD	Normally works within 105 ~ 130% rated output power for more than 3 seconds and then shut down o/p voltage with auto-recovery after 30 seconds if the peak load condition is removed	
		Constant current limiting within 130 ~ 150% rated output power for more than 3 seconds and then shut down o/p voltage, re-power on to recover	
	OVER VOLTAGE	29 ~ 33V	56 ~ 65V
		Protection type : Shut down o/p voltage, with auto-recovery or re-power on to recover	
	OVER TEMPERATURE	Shut down o/p voltage, recovers automatically after temperature goes down	
FUNCTION	DC OK REALY CONTACT RATINGS (max.)	60Vdc/0.3A, 30Vdc/1A, 30Vac/0.5A resistive load	
	CURRENT SHARING	Please refer to function manual	
ENVIRONMENT	WORKING TEMP. Note.5	-30 ~ +70℃ (Refer to "Derating Curve")	
	WORKING HUMIDITY	20 ~ 95% RH non-condensing	
	STORAGE TEMP., HUMIDITY	-40 ~ +85℃, 10 ~ 95% RH non-condensing	
	TEMP. COEFFICIENT	±0.03%/℃ (0 ~ 50℃)	
	VIBRATION	Component:10 ~ 500Hz, 2G 10min./1cycle, 60min. each along X, Y, Z axes; Mounting: Compliance to IEC60068-2-6	
SAFETY & EMC (Note 4)	SAFETY STANDARDS	UL508, TUV BS EN/EN62368-1, BSMI CNS15598-1, AS/NZS62368.1, EAC TP TC 004 approved ; (meet BS EN/EN60204-1)	
	WITHSTAND VOLTAGE	I/P-O/P:3KVAC I/P-FG:2KVAC O/P-FG:0.5KVAC O/P-DC OK:0.5KVAC	
	ISOLATION RESISTANCE	I/P-O/P, I/P-FG, O/P-FG:>100M Ohms / 500VDC / 25℃/ 70% RH	
	EMC EMISSION Note.8	Compliance to BS EN/EN55032 (CISPR32), BS EN/EN61204-3 Conduction class B, Radiation class A, BS EN/EN61000-3-2,-3, EAC TP TC 020, CNS15936,KC KSC 9832	
	EMC IMMUNITY	Compliance to BS EN/EN61000-4-2,3,4,5,6,8,11, BS EN/EN55024, BS EN/EN61000-6-2 (BS EN/EN50082-2), BS EN/EN61204-3, heavy industry level, EAC TP TC 020, KC KSC 9835	
OTHERS	MTBF	660.2K hrs min. Telcordia SR-332 (Bellcore) ; 70.7K hrs min. MIL-HDBK-217F (25℃)	
	DIMENSION	110*125.2*150mm (W*H*D)	
	PACKING	2.47Kg ; 6pcs/15.8Kg/1.55CUFT	

NOTE

1. All parameters NOT specially mentioned are measured at 230VAC input, rated load and 25℃ of ambient temperature.
2. Ripple & noise are measured at 20MHz of bandwidth by using a 12" twisted pair-wire terminated with a 0.1μF & 47μF parallel capacitor.
3. Tolerance : includes set up tolerance, line regulation and load regulation.
4. The power supply is considered a component which will be installed into a final equipment. The final equipment must be re-confirmed that it still meets EMC directives. (as available on https://www.meanwell.com//Upload/PDF/EMI_statement_en.pdf)
5. Installation clearances : 40mm on top, 20mm on the bottom, 5mm on the left and right side are recommended when loaded permanently with full power. In case the adjacent device is a heat source, 15mm clearance is recommended.
6. 3 seconds peak power max. and the average output power should not exceed the rate power.
7. Derating may be needed under low input voltage. Please check the derating curve for more details.
8. Consult MEAN WELL for deployment of Radiation class B.
9. The ambient temperature derating of 3.5℃/1000m with fanless models and of 5℃/1000m with fan models for operating altitude higher than 2000m(6500ft).

※ Product Liability Disclaimer : For detailed information, please refer to https://www.meanwell.com/serviceDisclaimer.aspx

■ Block Diagram

PFC fosc : 65KHz
PWM fosc : 60KHz

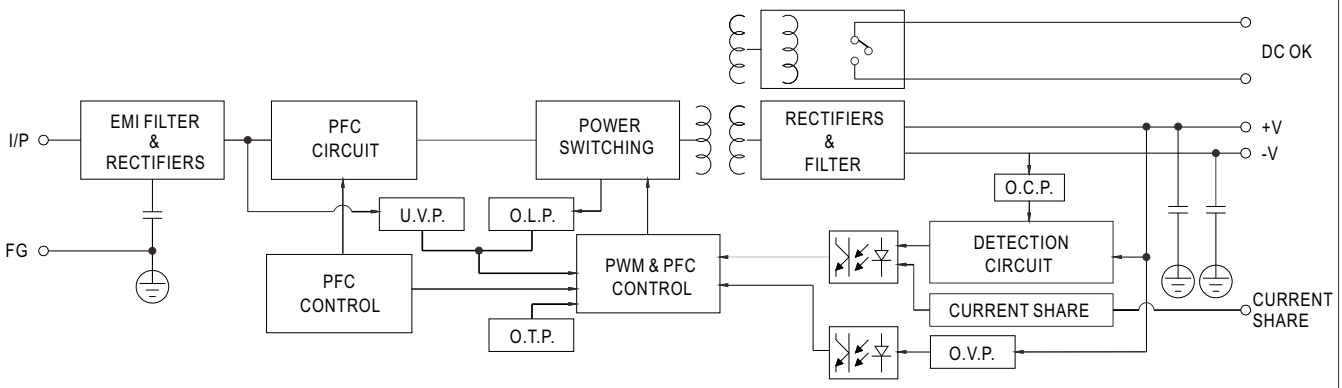

■ Derating Curve

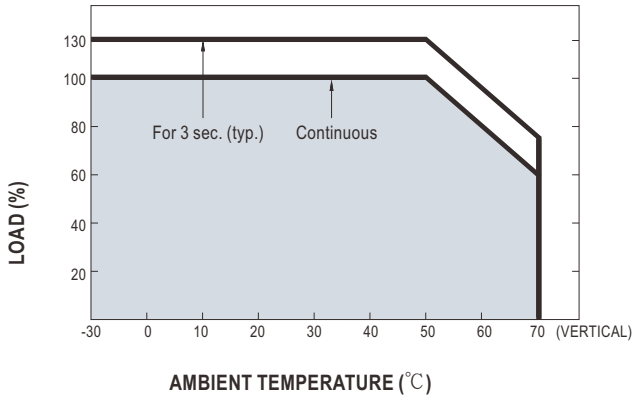

AMBIENT TEMPERATURE (℃)

■ Output derating VS input voltage

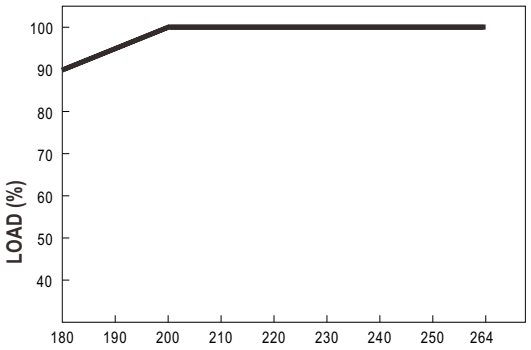

INPUT VOLTAGE (V) 60Hz

■ Peak Loading

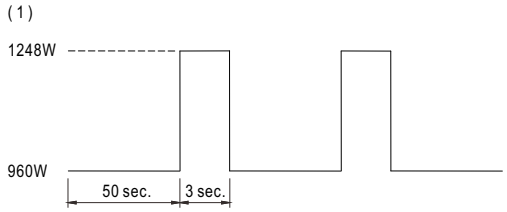

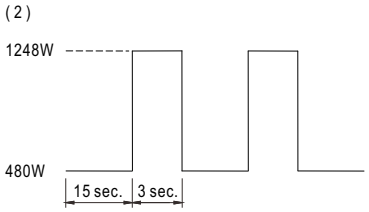

■ Function Manual

1. Current sharing
   (1) Parallel operation is available by connecting the units shown as below (P+,P- are connected mutually in parallel).
   (2) Difference of output voltages among parallel units should be less than 0.2V.
   (3) The total output current must not exceed the value determined by the following equation (Output current at parallel operation)=(The rated current per unit) x (Number of unit) x 0.9.
   (4) In parallel operation 4 units is the maximum, please consult the manufacture for other applications.
   (5) The power supplies should be paralleled using short and large diameter wiring and then connected to the load.
   (6) When in parallel operation, the minimum output load should be greater than 5% of total output load.
   (Min. load >5% rated current per unit x number of unit)
   (7) In parallel connection, maybe only one unit (master) operate if the total output load is less than 5% of rated load condition.
   The other PSUs (slaves) may go into standby mode and their output LEDs & relays will not turn on.
   (8) Some minor noise may be heard at light load condition under parallel operation.
   This is a normal phenomenon and the performance of the PSU will not be influenced.

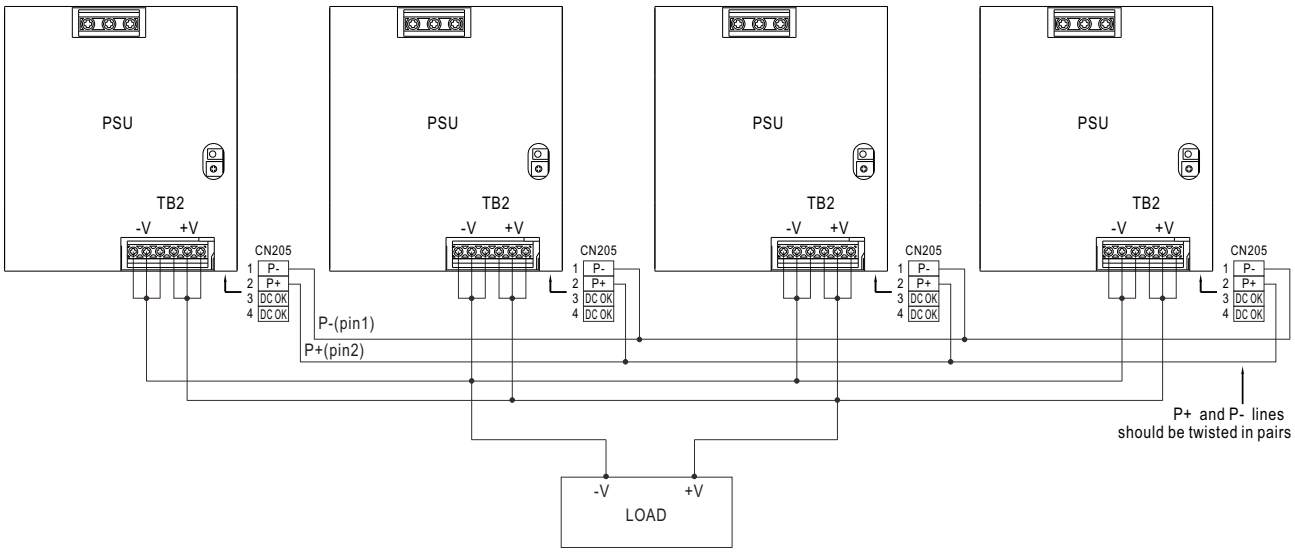

■ DC OK Relay Contact

Contact Close	PSU turns on / DC OK.
Contact Open	PSU turns off / DC Fail.
Contact Ratings (max.)	30V/1A resistive load.

■ Mechanical Specification

(Unit: mm , tolerance ± 1mm)

Case No.214A

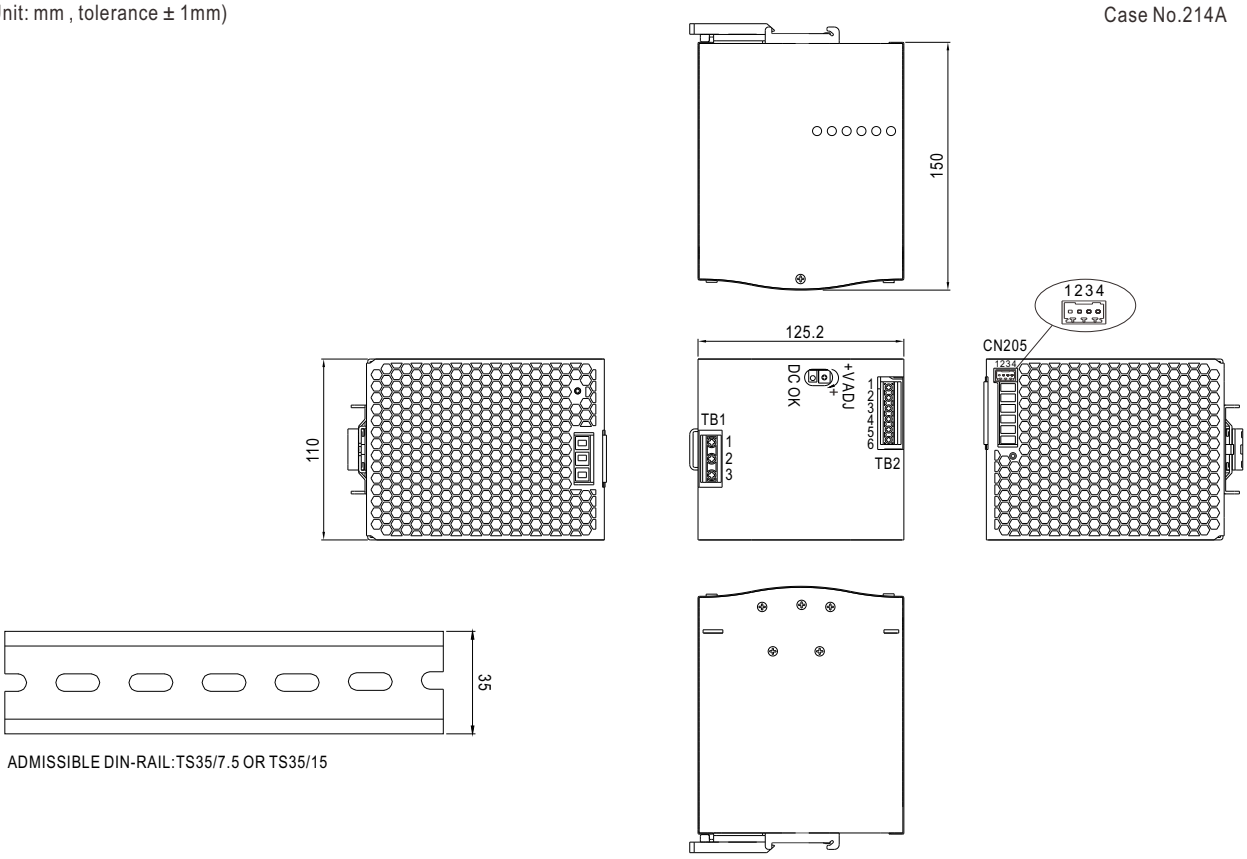

Terminal Pin No. Assignment (TB1)

Pin No.	Assignment
1	FG ⏚
2	AC/N
3	AC/L

Terminal Pin No. Assignment (TB2)

Pin No.	Assignment
1,2,3	DC OUTPUT +V
4,5,6	DC OUTPUT -V

Control Pin (CN205) : DINKLE ECH250R-04P or equivalent

Pin No.	Assignment	Mating Housing	Wire Diameter
1	P-(Current Share)	DINKLE ESC250V-04P or equivalent (Including in the single package)	0.081~0.517mm^2 (28~20AWG)
2	P+(Current Share)		
3,4	DC OK Relay Contact		

■ DIN Rail Type Installation

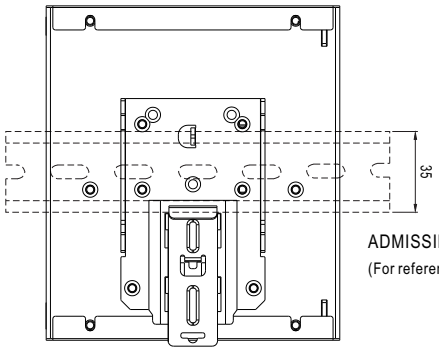

This series fits DIN rail TS35/7.5 or TS35/15.
For installation details, please refer to the Instruction manual.

ADMISSIBLE DIN-RAIL:TS35/7.5 OR TS35/15
(For reference only. Not included with unit.)

■ Packing

Standard Packing	Q'TY/Box (PCS)	One Box G.W.	Total Q'TY/ Carton(PCS)	One Carton G.W.
Unit : mm 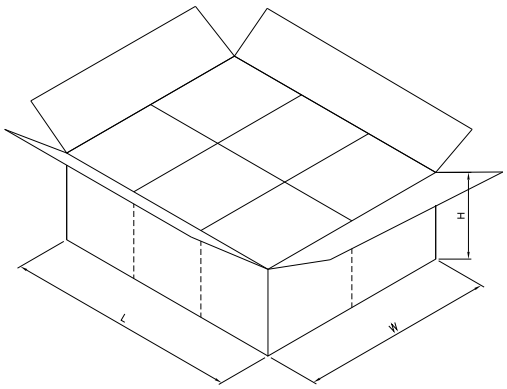 CARTON L492 x W412 x H199	1	2.47Kg	6	15.8Kg